4ch BEAM FORMING

Sound Source Visualization System

ONO SOKKI

Where does this sound

Evolved probe microphone meets the demands you want to see, and you want to know.
Small and lightweight
Use it anytime, anywhere

▶ Achieves wide analysis frequency range

Sound source visualization from 500 Hz to 8 kHz* of frequency range
*Recommended frequency. Refer to [Specification] in page 7.

▶ Visualizing sound source using only 4 microphones

4ch Beam Forming System localizes sound source position with minimum microphones by "Beam Forming" and new calculation method.

▶ Monitors sound source in real-time (5 times/sec.)

You can monitor sound occurring and confirm the sound source position in the field.

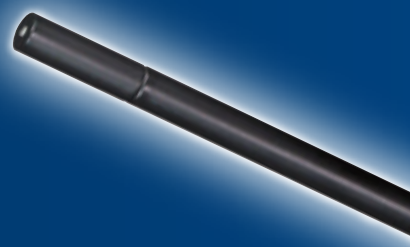

▶ Enables detailed analysis even transient/ impulsive sound

As for sounds changing very quickly, offline analysis is effective.
It enables further analysis of transient/impulsive sound by recorded sound and video.

4ch BEAM FORMING S

Sound source visualization method: Beam Forming

Beam forming is one of the sound visualization techniques that calculates the distribution of sound pressure and sound intensity from the data recorded with microphone array system, and superimposes the resulting view with the video through the camera.
This technique produces an easily understandable result because it shows the result in a color map.
The microphone array size has been apt to become large. This is because the number of microphones used in beam forming occasionally exceeds 100 and they are randomly positioned so that they can handle wide range of sounds.
Ono Sokki's 4ch Beam Forming System has achieved sound visualization in real-time by minimum number of microphones.

come from?

SYSTEM

Sound Source Visualization
Probe Microphone **MI-5420**

System example

The measurement system includes DS-3200 series as a measurement unit, MI-5420 as microphones. Two types of microphone array (120 mm/60 mm-interval) are available according to analysis frequency.
BF-3100 and OS-2000 series software are used for measurement and analysis.
Other than 4 channels connected to MI-5420, 4 more channels can be added. You can connect an accelerometer and a rotation detector to see vibration waveform and rotation speed.

MI-5420 4ch Beam Forming System

Wide variety of sensor connection*

Rotation

Optical detector
LG-9200

+

Digital
Engine Tachometer
CT-6700

+

Signal cable
MX-7100 series

Vibration

Accelerometer with
built-in amplifier
NP-3000 series

+

Signal cable
NP-0120/0130/0150/0170 series

+

Miniature/BNC
conversion adapter
NP-0021

Acoustic

Sound Level Meter
LA-1411/1441/4441
(Integrated type)

+

Signal cable
AX-501

OS-2000 series

Time-series Data Analysis Software OS-2000 series

Software

OS-2000 series edits and analyzes the time-series data which is too long to be used on Microsoft® Excel® flexibly and freely. It supports a wide variety of data formats, not only general formats such as CSV and WAV files, but also unique format of each recording device.
OS-2000 series has many useful functions including overlay of waveforms of different formats, division, moving, and zooming in and out. Smooth linking to Microsoft® Excel® is also available.
Various other functions, such as video playback function, FFT analysis function, filter functions and sound quality evaluation are available.

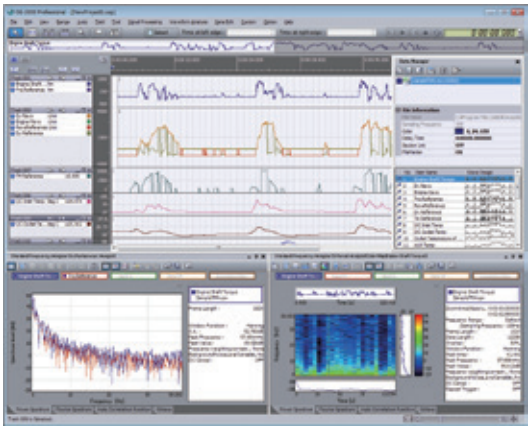

FFT analysis screen

*For more information on DS-3200 series, OS-2000 series, and other measuring instruments, please refer to each brochure.

Anywhere, any sound

Enables measurement very close to a target

(Example)
Opening/closing sound of door mirror

Easy installation

(Example)
Vehicle sound while driving

Can be used in a narrow space

(Example)
Sliding sound of power sheet

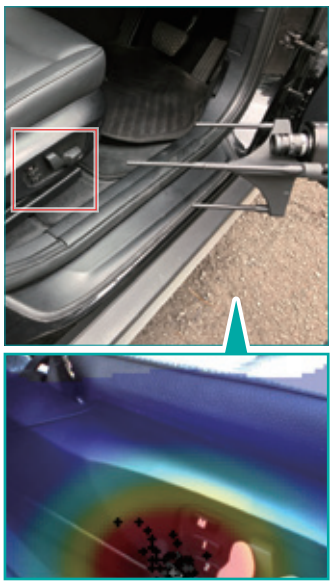

Compact and lightweight microphone array flexibly measures sound in various environment.
Two types of software support analysis regardless of the kind of sound.

Real-time monitor software

This software performs and displays sound source visualization processing of a sound occurring from the measurement object in real-time (5 times/sec.). Simultaneous record (25 times/sec) and playback are also available. You can find a sound source position while moving probe microphone and changing analysis frequency band.
The frequency band of abnormal sound can be confirmed by hearing the sound with the Bandpass filter applied.

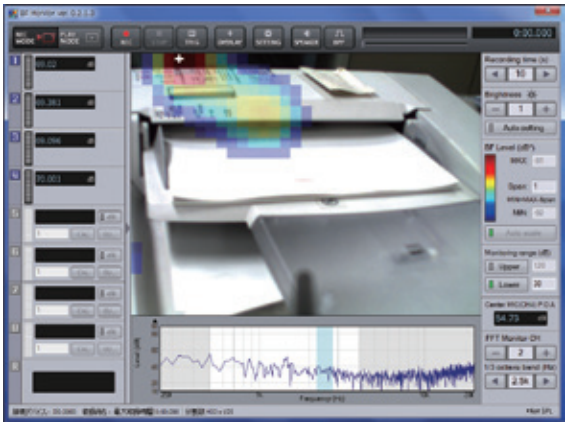

Real-time monitor software screen

Offline analysis software

This is software which is plugged in the OS-2000 series.
Offline analysis is effective for the sound that is difficult to reproduce or changing very quickly. By recording the sound and images, the analysis of those sound can be performed repeatedly.
Because there is no data loss, it is surely possible to analyze and visualize the sound source position of an unexpected sound, such as transient or impulsive sound.

◆Offline analysis processing: 25 times/sec or more of time resolution
◆OS-2000 series (Time-series data analysis software) OS-2720 (FFT analysis package) and OS-0281 (video playback option) are required.
◆The addition of the OS-0261 (IIR filter) option is recommended.

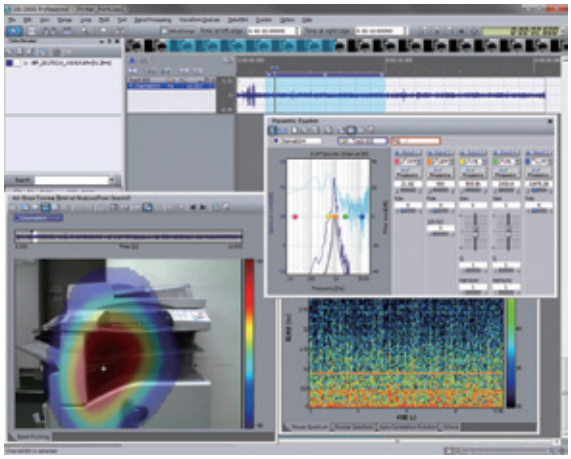

Offline analysis software screen

Applications

The following shows each example of before and after measures by using 4ch Beam Forming Sound Source Visualization System.

1 Operating sound of a multifunctional printer

[Measurement procedure]

Record the sound from central open area of the multifunctional printer during paper feeding.

▼

Decide the place to take noise reduction measures referring to the recorded sound data (finding the place from which the sound is occurring)

▼

Paste shielding tapes and record the sound during paper feeding again.

▼

Analyze the recorded data by offline analysis software (BF-3100), and compare the result before and after the noise reduction measures. (without or with the shielding tape)

[Analysis result]

Color maps and sound pressure levels measured by a Sound Level Meter tell the change of the sound radiated from open area.
Compare the sound source position (red area) on color maps Fig.1 and Fig.2.
After that the shielding tapes are pasted, there is no red area in Fig.2.
The sound pressure level (A-weighting) has been reduced about 10 dB compared to the noise before measures, from 72.2 dB to 62.6 dB.

Fig.1 Before measures (without shielding tapes)
A-weighting sound pressure level: 72.2 dB

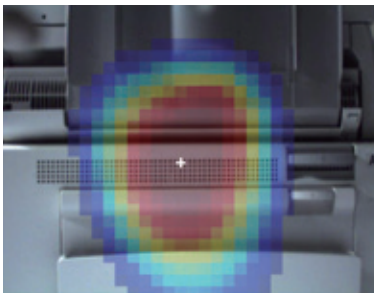

Fig.2 After measures (with shielding tapes)
A-weighting sound pressure level: 62.6 dB

2 Time Sequence Analysis of Vehicle Door Closing Sound

[Analysis result]

When a door is closed, various noises are generated from various positions in a short period.

As shown in the following time series graph, it contains two crests (A, B). Frequency analysis shows each sound pressure becomes large at the 1.6 kHz band.

Visualizing the sound by focusing upon this band, you can see that A is the waveform of door-hitting sound from the lower part of the door, and B is the waveform of which contains both the door-hitting sound and reflection sound on the ground.

BF-3100 can visualize and check that several sounds are occurring along with the time series even though it is heard as one sound with human ears.

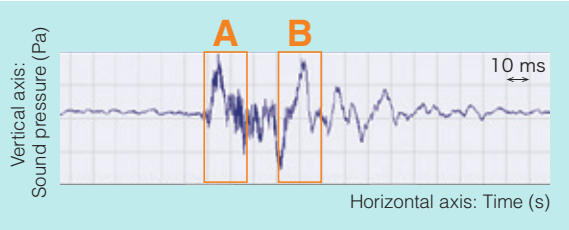

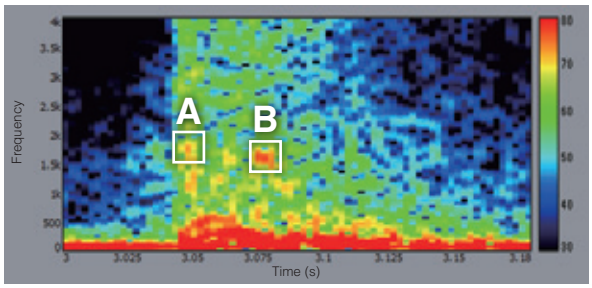

A Door hitting sound

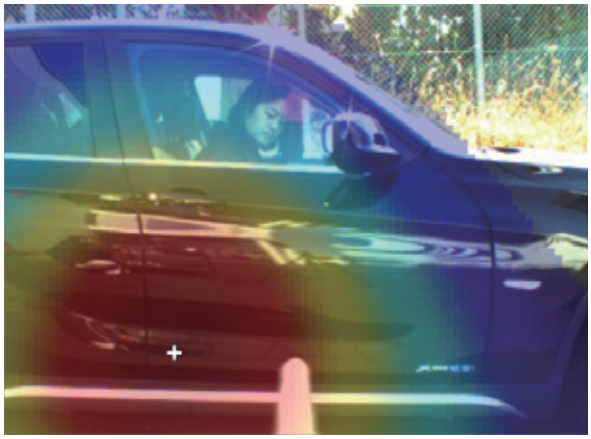

B Composite sound of door-hitting sound and reflection sound on the ground.

Specification of 4ch Beam Forming System

MI-5420 Sound Source Visualization Probe Microphone

			With 60 mm probe head	With 120 mm probe head
Sound Source Visualization Probe Microphone	Outer Dimensions*1		74.3 (W) ×174.5 (H) × 311.0 (D) mm	141.0 (W) × 174.5 (H) × 349.0 (D) mm
	Mass (probe head+main body+grip) *2		Approx.615 g	Approx.735 g
	Operating temperature range		0 to 50 °C	
	Operating humidity range		85 % RH or less (with no condensation)	
	Storage temperature range		-10 to 60 °C	
	Storage humidity range		90 % RH or less (with no condensation)	
	Applicable standard (CE marking)		EMC Directive 2014/30/EU Standard EN61326-1	
	Power supply		Supplied from DS-3200/3100/2100A	
		Supplying system	CCLD	
		Voltage	24 VDC	
		Current	4 mA×4	

*1 When a grip is mounted vertically (not including a cable), not including a protruded section.
*2 Not including a cable

Probe head	Interval between microphones		60 mm (±1 mm)	120 mm (±1 mm)
	Visualization frequency band*3		1 kHz to 8 kHz	500 Hz to 4 kHz
	Microphone*4	Diameter	7 mm	
		Max. sound pressure level	110 dB (1 kHz, THD=3 %)	
	Connection of probe head and main body		Finger screw (slotted knurling screw) *5	

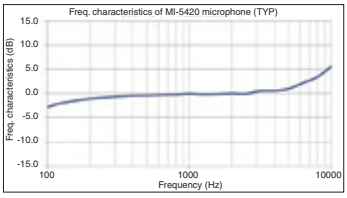

*3 Definition of visualization frequency band
Definition 1: When the distance of sound source and a microphone is 1m at the free sound field, the space resolution until the frequency is damped -6 dB from the center of the sound source should be within 30 cm.
Definition 2: Vertial sound source does not appear in the camera viewing angle. (Analysis which 1/3 octave band center frequency is from 315 Hz to 16 kHz is possible even though it is out of guaranteed range.)
*4 Refer to the specification of the microphone for more details.
*5 Recommended tightening torque : 0.7 Nm

Main body	Camera*6	CMOS USB camera	Imaging device	CMOS 1/3 color
			Number of pixels	VGA (640×480) (fixed)
			Focal point distance	6 mm
			Aperture	F 1.2 to 16
			Movie file	bfm file format (Ono Sokki original format)
			Frame rate	5 fps (at real-time monitoring)
				25 fps (at recording)
			Camera viewing angle	Horizontal: 42 °verticall: 26 ° (TYP value)
			Inerface	USB 3.0
			Power supply	USB bus-power
	Main body	Top surface mounting screw hole*7 ×2	1/4-20UNC 6 mm	For accessory
		Undersurface mounting screw hole x 2	1/4-20UNC 6 mm	For grip
		Grip undersurface mounting screw hole*7 x 1	1/4-20UNC 6 mm	For accessory
	MI-5420 composite cable	Exclusive cable	Approx. 3 m long	
		Diameter	Approx. ϕ20 mm*8	
		Covering	Resin mesh sleeve*9	
		Minimum bending radius	Approx. 70 mm	

Accessory	4ch Beam Forming Microphone Acoustic Correction File CD	1
	Microphone position checking plate	1
	Carrying case	1
	Stand *10	1
	BNC cable (0.2 m)	1
	BNC-JPJ adapter	1
	Instruction manual	1

*6 Lens cannot be replaced.
*7 Measurement using grip /lighting made by other than Ono Sokki may give large affect on the result. Please consult your nearest distributor or onosokki sales office nearby.
*8 When a cable is put through a hole, it should be more than φ30 mm in view of a connector part.
*9 Plural cables are bundled up by polyester and nylon.
*10 Used for placement of a probe microphone.

BF-3100 Beam Forming Software

Real-time monitor	Beam Forming calculation	Number of color map display divisions	33×25 (fixed)
		Window function	Rectangular (fixed)
		Visualization setting band	Every 1/3 octave band
	FFT monitor	Frame length	40 ms (2048 points fixed)
		Display frequency band*11	250 Hz to 20 kHz
	Recording function*12	Sampling frequency	51.2 kHz (fixed)
		Recording frequency range	20 kHz (fixed)
		A/D conversion	24-bit (fixed)
		Number of input channels	Max. 8ch :for microphone (1 to 4ch), for general purpose (5 to 8ch)
		Internal trigger	Settings of slope and level
		External sampling	Used for display and recording of rotation speed
		Recording file format	bfm file (Ono Sokki original format)
		Max. recording time	1200 seconds

*11 Differs from the frequency band of Beam Forming Visualization.
*12 Recording condition can be checked right after the recording completion by using play mode.

Offline Analysis (OS-2000 series plugin function) *13	Number of color map display divisions	33×25 to 161×121
	Frame length	40 ms (2048 points fixed)
	Window function	Rectangular/Hanning/Force
	Visualization frequency band	Every 1/3 octave band/custom (specified frequency section)
	Output function	AVI/BMP/CSV/OC-1300*14

*13 Vide playback function (option) is required.
*14 OC-1300 ver.3.6 (option) is required.

Accessory	Installation manual	1	Instruction on the installation procedure
	BF-3100 Installation CD	1	Installation CD of BF-3100 4ch Beam Forming Software and camera driver
	DS-3000 Installation CD	1	CD for updating of DS series DSP

Operating Environment

Conforming analysis device: DS-3200/3100/2100A (Input: 4ch or more, 8ch max.*15)

	Main unit	Interface cable	Signal output	Remote control
DS-2000 series	DS-2100*16	DS-0299	DS-0271A/DS-0272A	DS-0295
DS-3000 series	DS-3100	DS-0399	DS-0371/DS-0372	DS-0395
	DS-3200	USB cable attached	DS-0371/DS-0372	

*15: BF-3100 does not support 100 kHz unit and frame link function. BF-3100 can be used on the 10ch or more of main unit. However, the maximum number of channels to record by real-time monitor is 8.
*16: Only DS-2000 series A version is available.

Personal Computer	OS	Microsoft® Windows® 7 Professional (64-bit), Microsoft® Windows® 10 Pro (64-bit) .NET Framework 3.5 Service Pack 1 must be installed.
	CPU	Intel® Core™ i5 2.70 GHz or more (Intel® Core™ i7 is recommended.)
	Memory	4 GB or more
	Required HDD capacity	16 GB or more of free space
	Optical drive	Optical drive that can reproduce the installation CD.
	Display	Required 1280 × 768 or more
	USB port	USB 3.0 × 1 (Camera*17), USB 2.0 or more × 1 (license key), USB 3.0 × 1 (DS-3200*17) or USB 2.0 × 1 (DS-0299/0399) *17*18
	Others	Sound device
	Software	Required installation of OS-2000 series ver.2.9 or higher version.

*17: USB HUB cannot be used.
*18: Communication error may occur with some personal computers if DS-0299/0399 is connected to the USB 3.0 port.

4ch BEAM FORMING SYSTEM

■ Outer Dimensions

(Unit: mm)

MI-5420

■ 120 mm

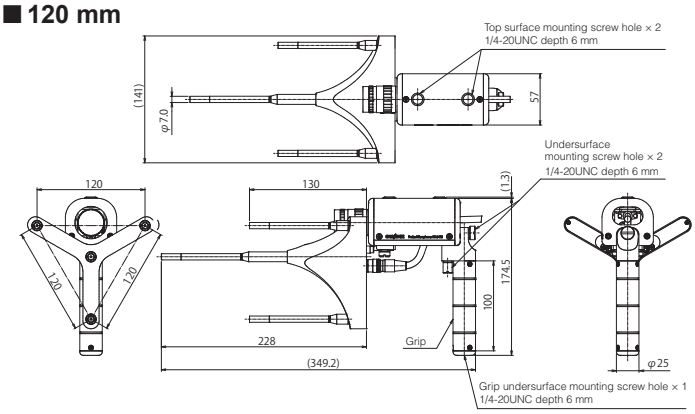

■ 60 mm

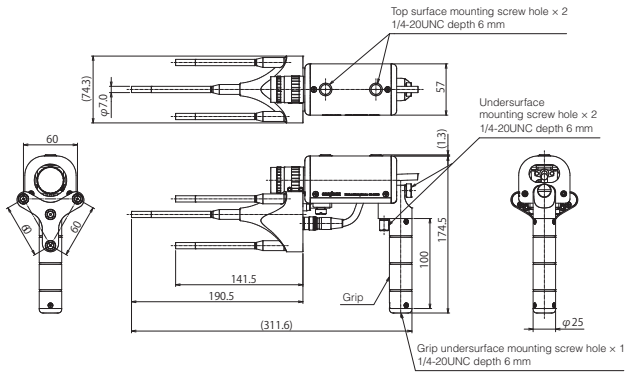

■ System example

Model name	Product name
MI-5420	Sound Source Visualization Probe Microphone*1
BF-3100	4ch Beam Forming software
OS-2720	OS-2000 series FFT Analysis package
OS-0281	OS-2000 series video playback function (option)
OS-0261	OS-2000 series IIR filter (option)*2
DS-3204, DS-0371	Data Station (4ch), signal output (option)
	Personal Computer

*1 Two types of probe microphone (120 mm and 60 mm), camera, combined cable exclusive for camera • microphone (3 m) are included.

*2 Required when IIR filter which is added to the real-time monitor is used in offline analysis.

Sound Source Visualization System using MI-6420 3D SI probe

BF-3100 4ch Beam Forming software can be used with the MI-6420 3D SI probe. Using MI-6420 has advantages of supporting wide range of sound visualization measurement methods including BF, EI*, and SI*.

*EI: Envelope Intensity SI: Sound Intensity

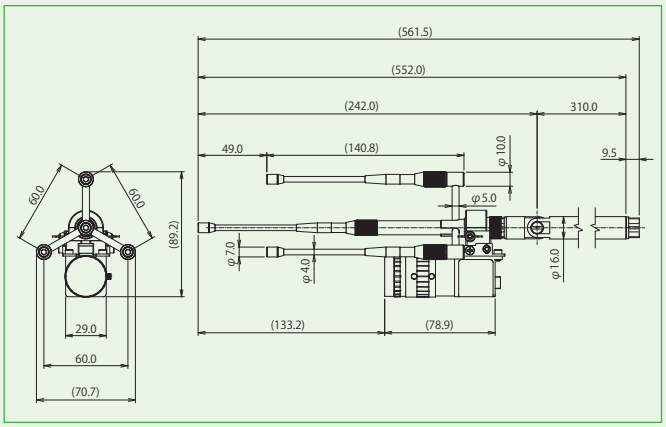

Specification of MI-6420 (60 mm)

Distance between microphones	60 mm (regular tetrahedron)*3
Analysis frequency range	1 kHz to 5 kHz
Length	560 mm
Mass (excluding a cable)	Approx. 300 g
Operating temperature range	0 to +40 °C
Storage temperature range	-10 °C to +60 °C
Connection cable	approx. 5 m

*3 The probe microphone of 20 mm-interval is also included to MI-6420. Mainly used for sound visualization measurement by EI, SI.

■ System example

Model name	Product name
BF-3100	4ch Beam Forming software
OS-2720	OS-2000 series FFT Analysis package
OS-0281	OS-2000 series video playback function (option)
DS-3204/DS-0371	Data Station (4ch)/signal output (option)
MI-6420	3D SI probe
MX-101	Signal cable 1.5 m (BNC-BNC) × 4
CF-0610	Microphone amplifier
Others	Camera kit (Camera, USB cable (3 m), synchronization cable (5 m))
	Personal Computer

ONO SOKKI

WORLDWIDE ONO SOKKI CO., LTD.
1-16-1 Hakusan, Midori-ku, Yokohama, 226-8507, Japan
Phone : +81-45-935-3918 Fax : +81-45-930-1808
E-mail : overseas@onosokki.co.jp

*Outer appearance and specifications are subject to change without prior notice.

URL: https://www.onosokki.co.jp/English/english.htm

U.S.A.
Ono Sokki Technology Inc.
2171 Executive Drive, Suite 400
Addison, IL. 60101, U.S.A.
Phone : +1-630-627-9700
Fax : +1-630-627-0004
E-mail : info@onosokki.net
http://www.onosokki.net

THAILAND
Ono Sokki (Thailand) Co., Ltd.
1/293-4 Moo.9 T.Bangphud
A.Pakkred
Nonthaburi 11120, Thailand
Phone : +66-2-584-6735
Fax : +66-2-584-6740
E-mail : sales@onosokki.co.th

INDIA
Ono Sokki India Private Ltd.
Plot No.20, Ground Floor, Sector-3,
IMT Manesar Gurgaon-122050,
Haryana, INDIA
Phone : +91-124-421-1807
Fax : +91-124-421-1809
E-mail : osid@onosokki.co.in

P.R.CHINA
Ono Sokki Shanghai Technology Co., Ltd.
Room 506, No.47 Zhengyi Road, Yangpu
District, Shanghai, 200433, P.R.C.
Phone : +86-21-6503-2656
Fax : +86-21-6506-0327
E-mail : admin@shonosokki.com

PRINTED WITH SOYINK

CAT.NO. 1657-04E Printed in Japan 1704 (OKI) 1K