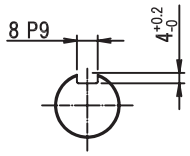


Shaft-end key groove dimension

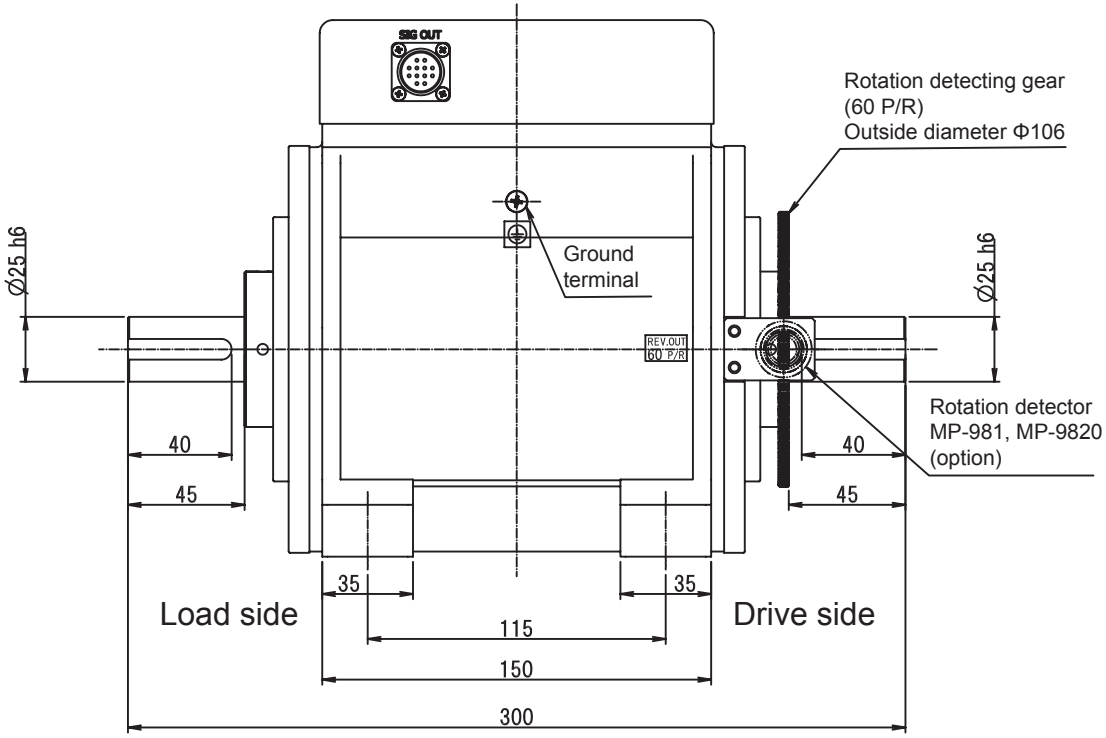


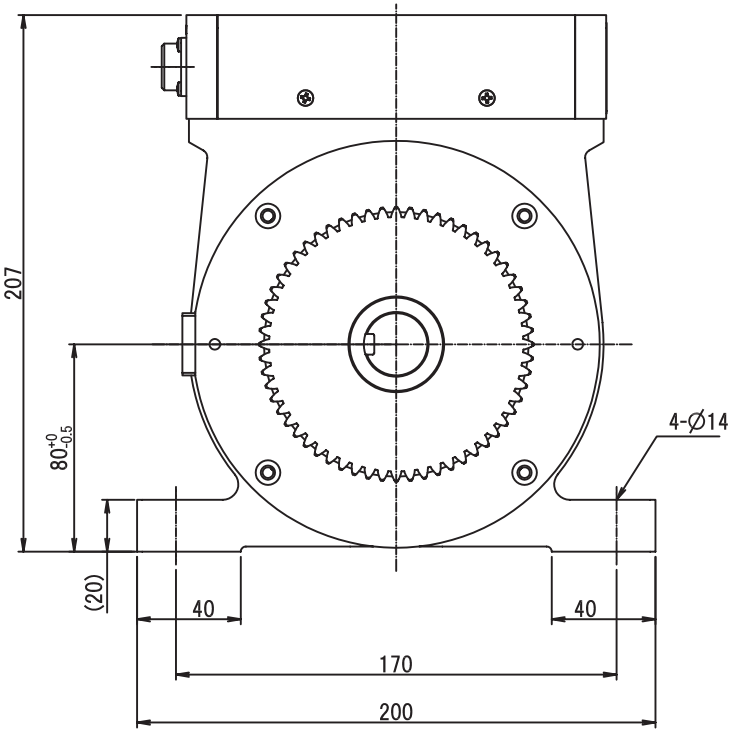


# TH-1505
# TH-1106

ONOSOKKI