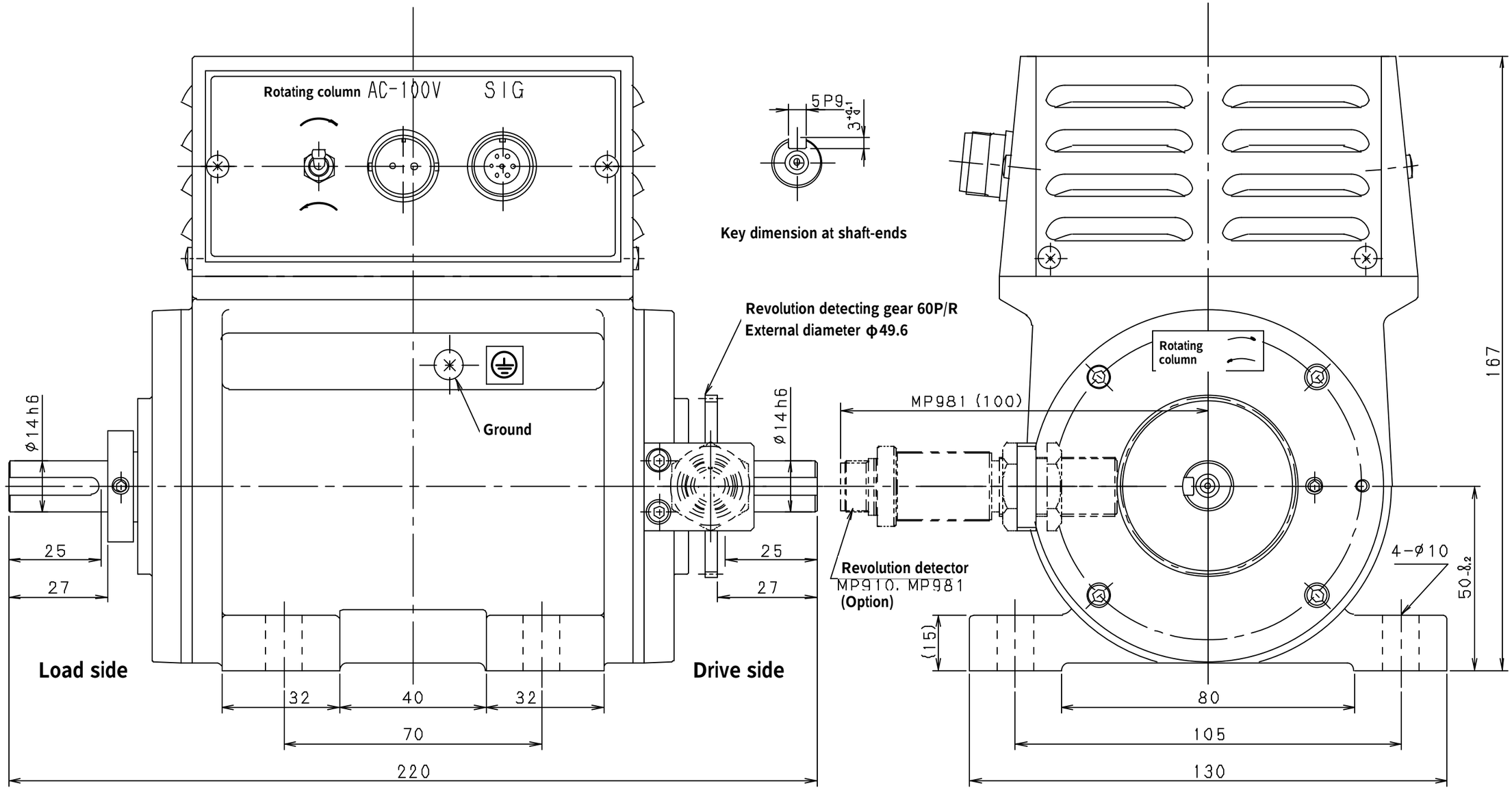

SS-100, 200

(Unit: mm)

ONO SOKKI