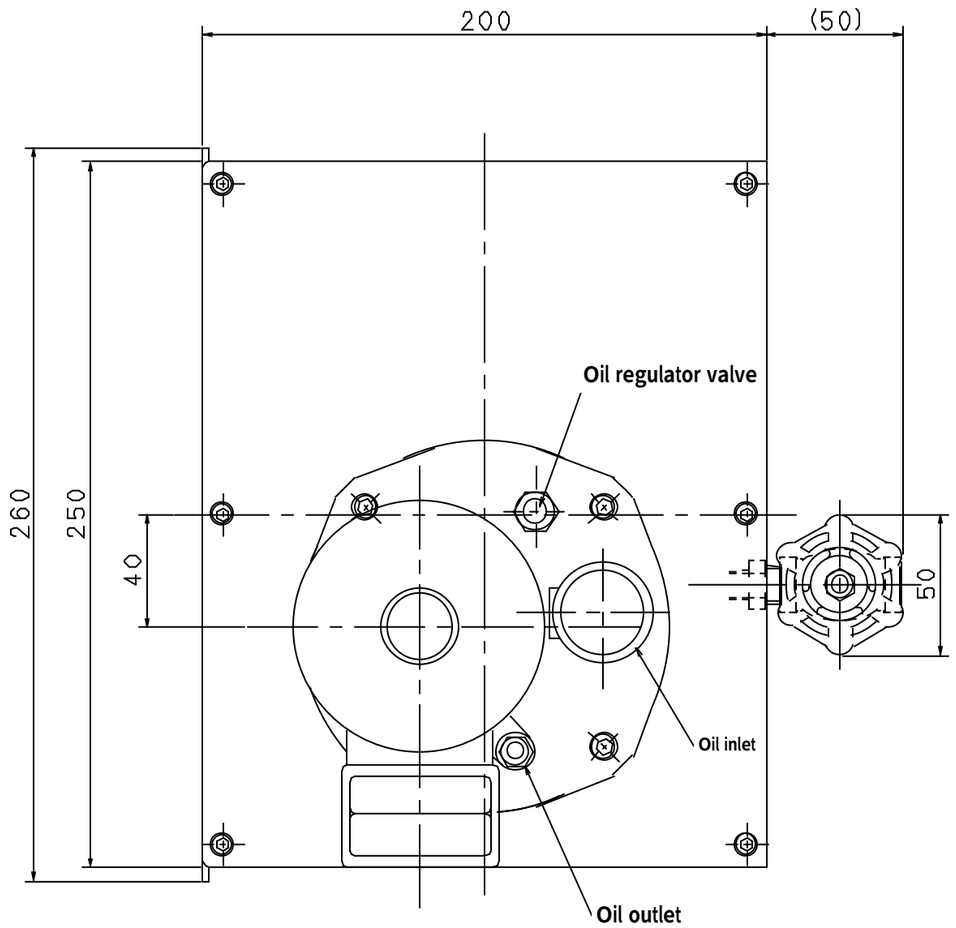

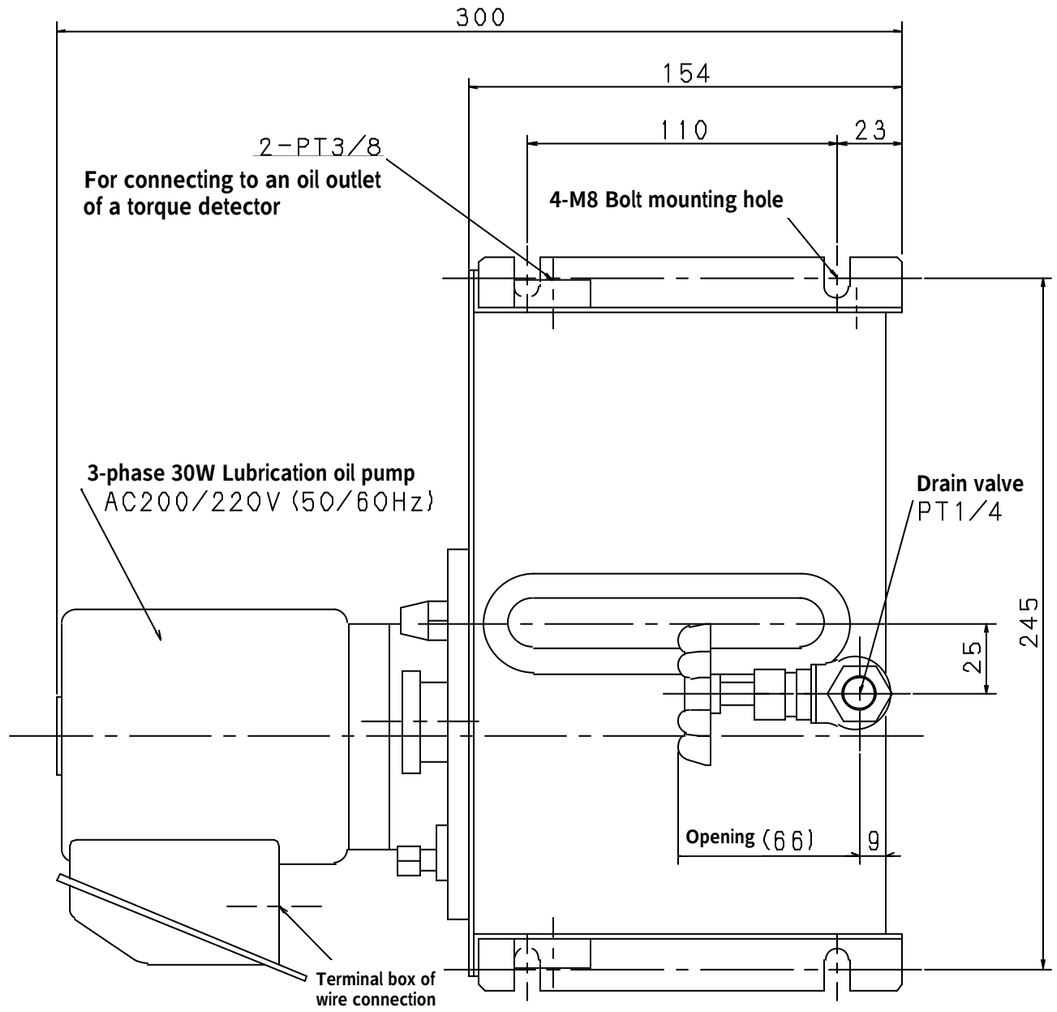

(Unit: mm)

Oil drop lubrication unit for the DD-507, 108

ONO SOKKI