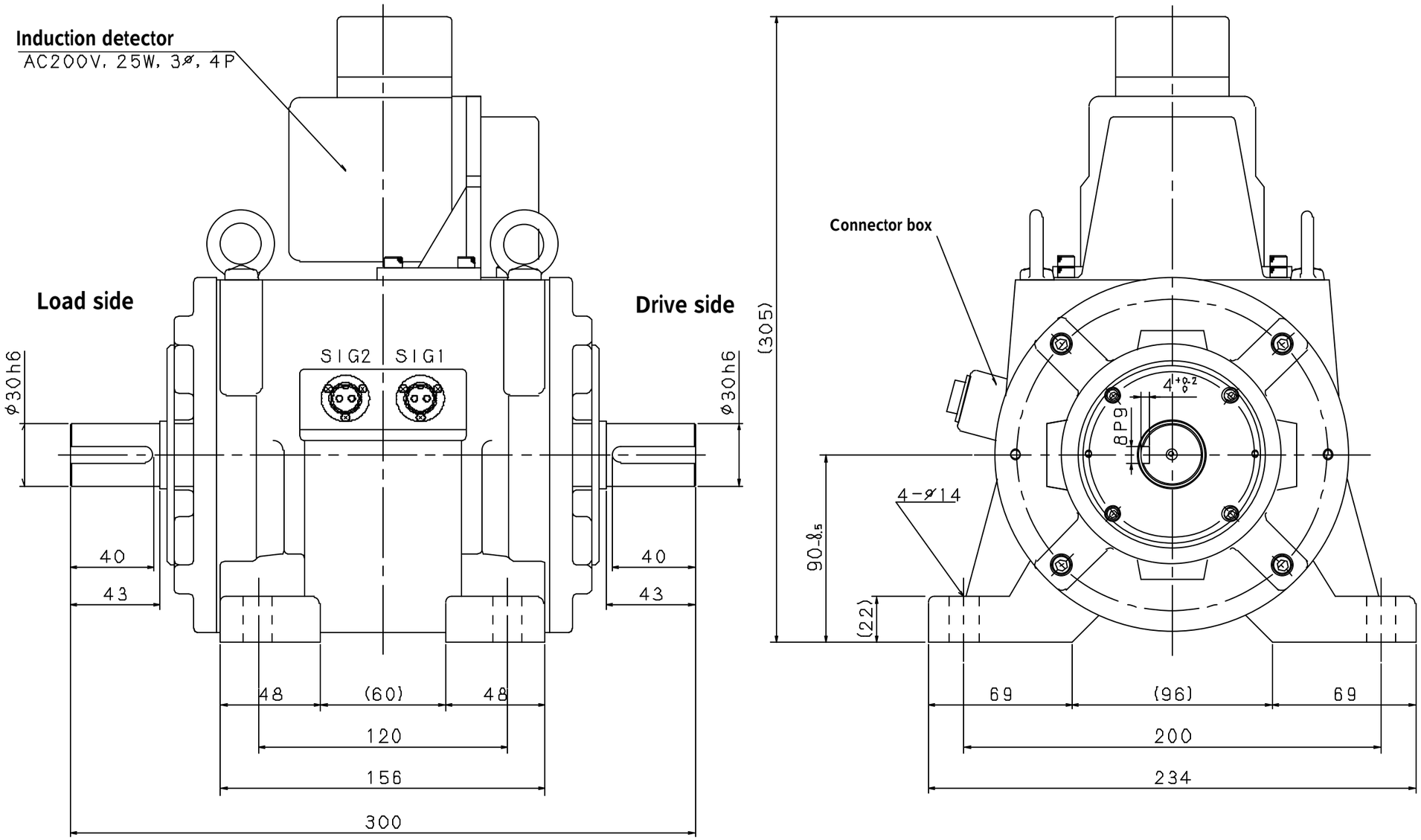

Weight: 27kg
(Unit: mm)

DSTP-5, 10

ONO SOKKI