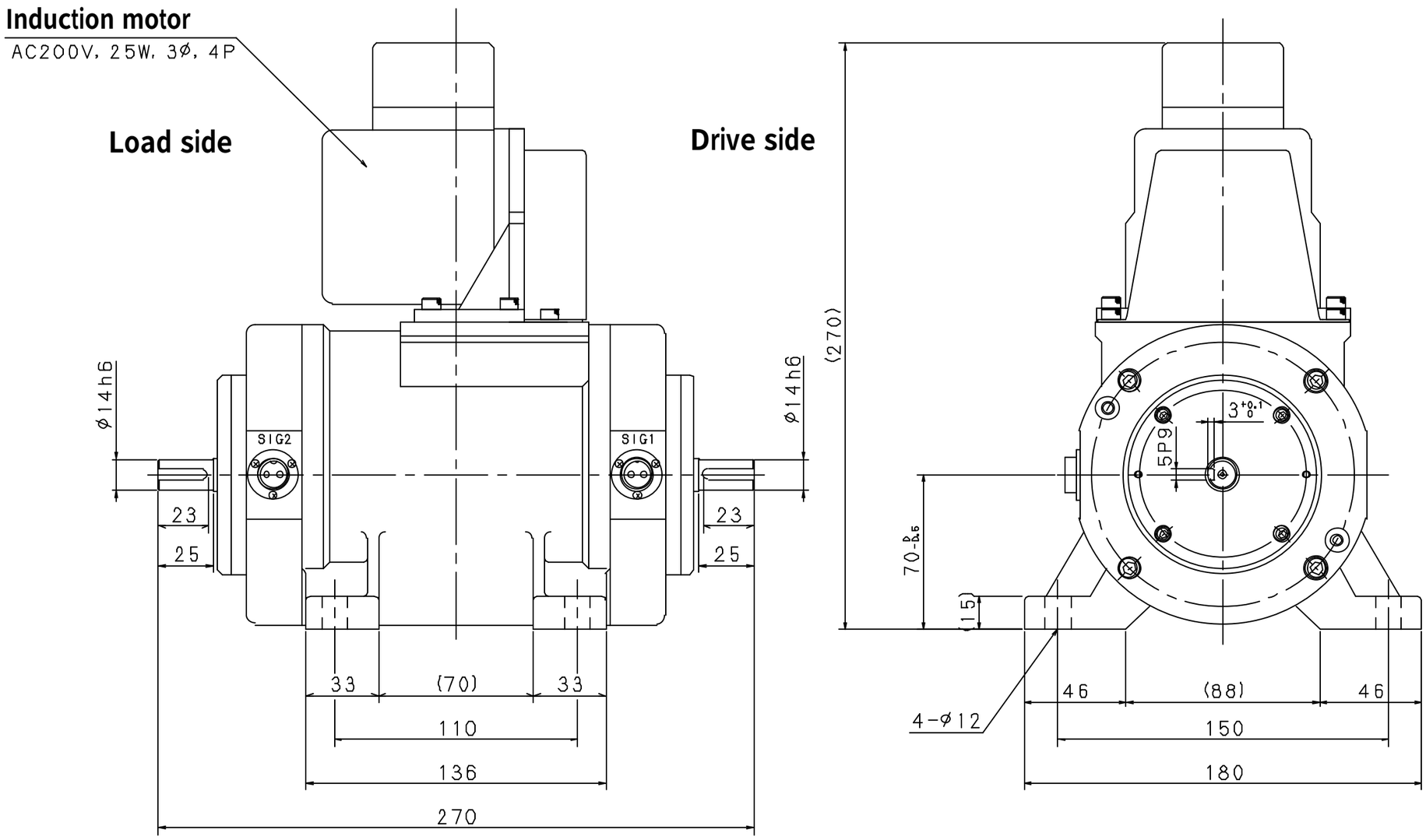

Weight: 19kg
(Unit: mm)

DSTP-05, 1, 2
ONO SOKKI