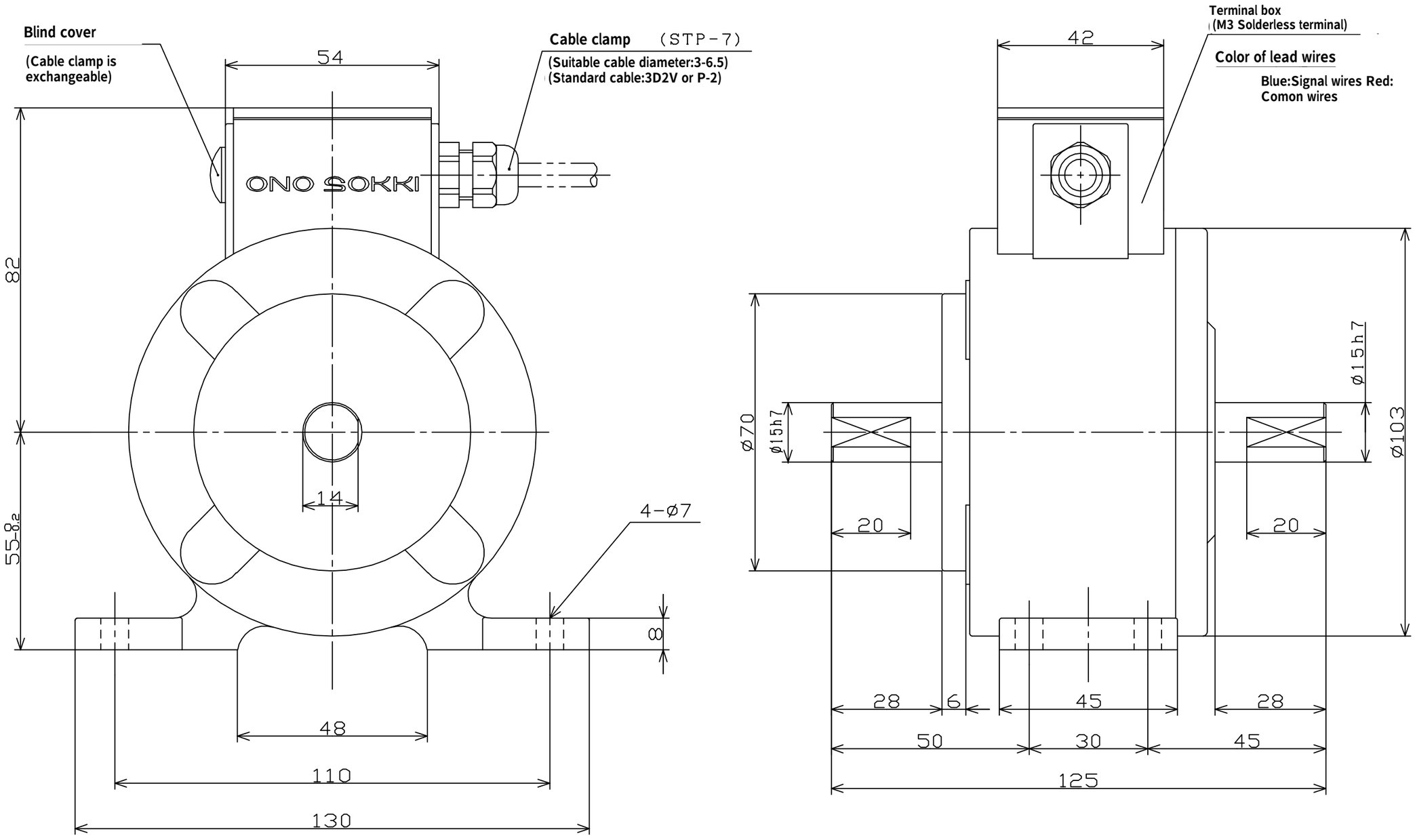


(Unit: mm)

MP-820B

ONO SOKKI