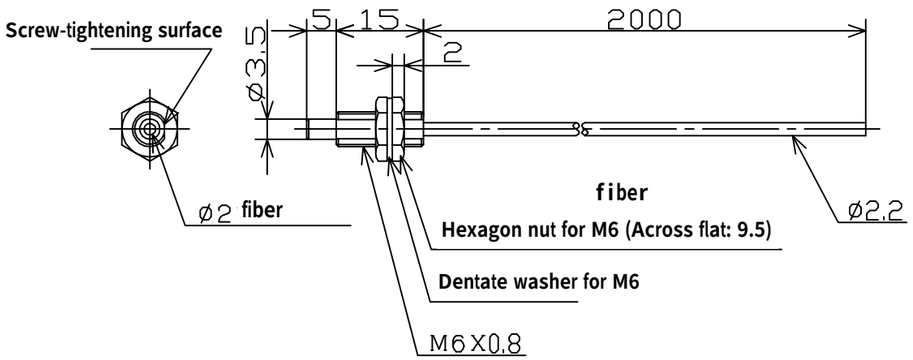

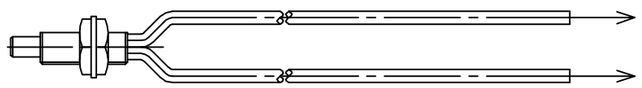

Sensor unit

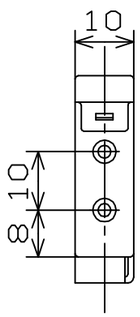

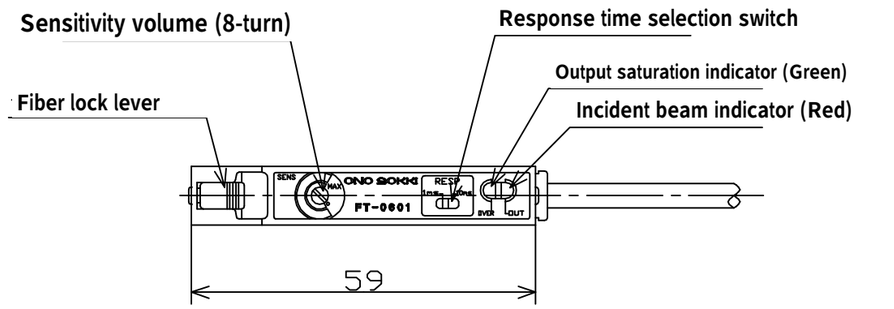

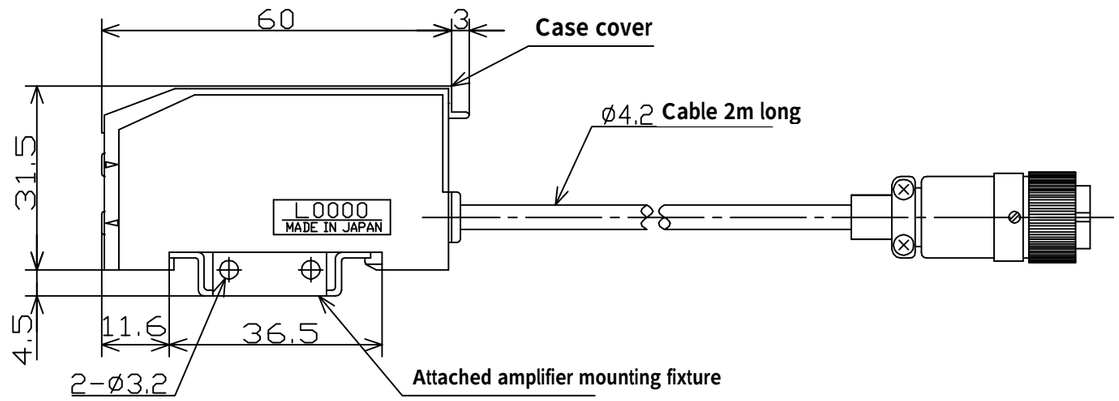

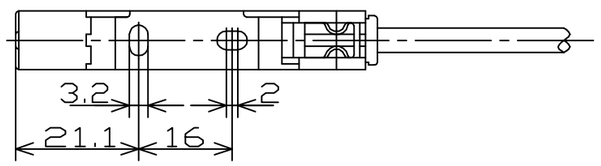

Amplifier unit

Note: The above views are shown without the case cover.

(Unit: mm)

FT-0601

ONO SOKKI