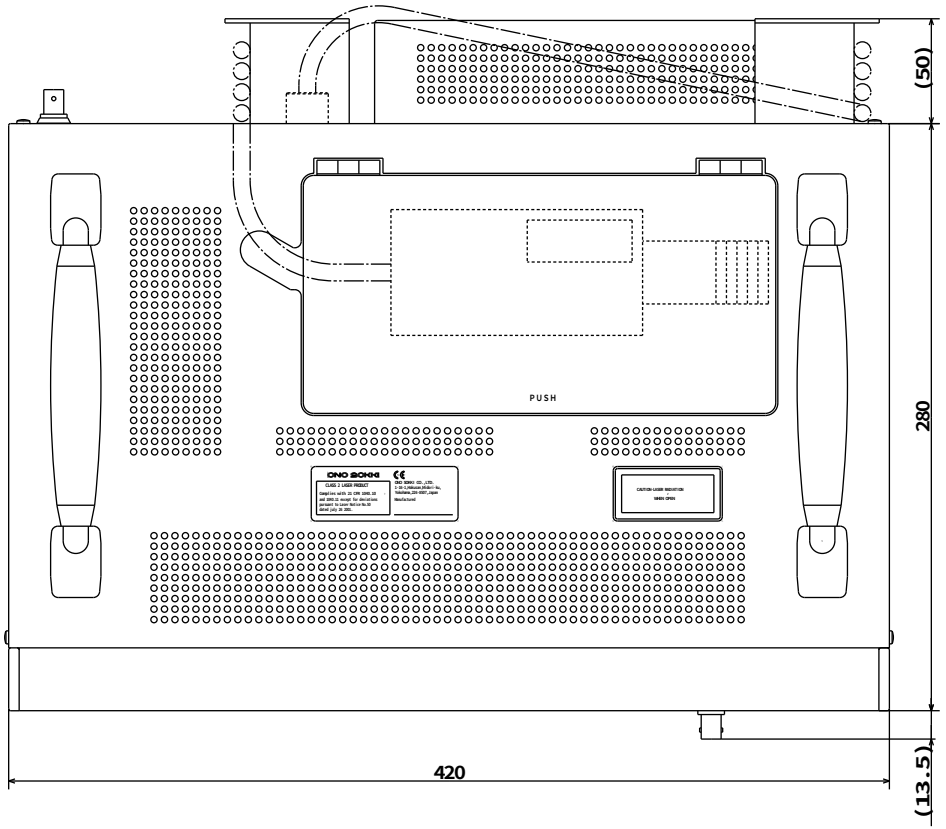

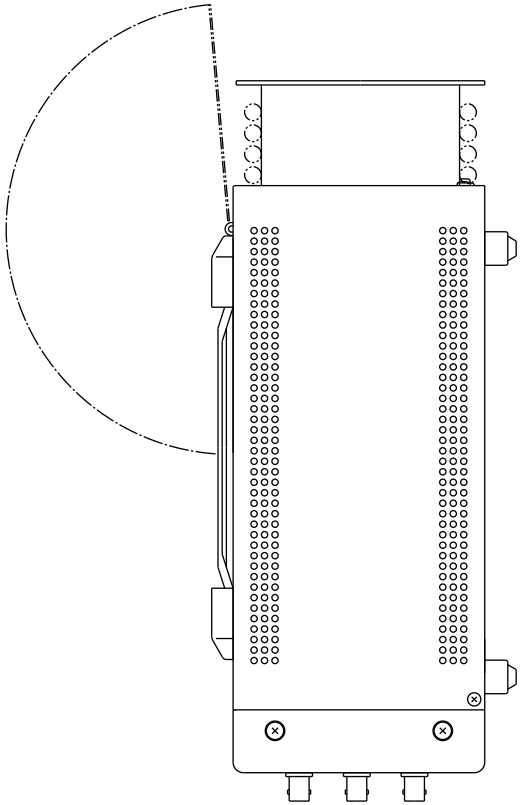

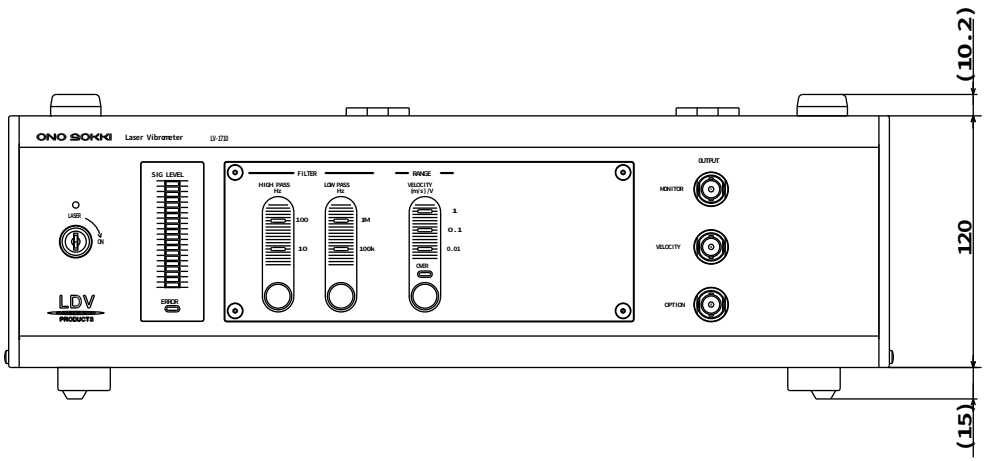

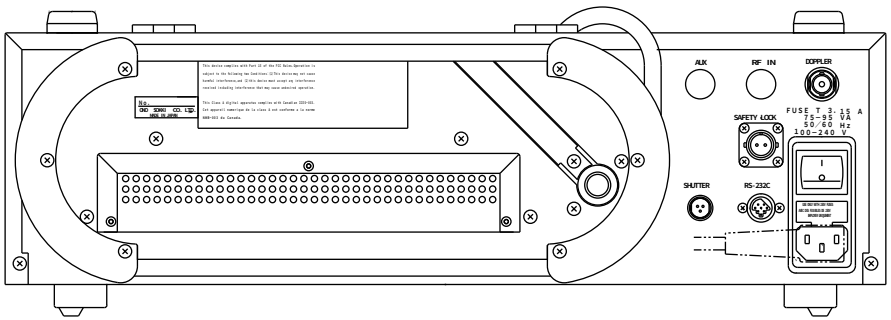

REAR VIEW

Weight: Approx. 12kg
(Unit: mm)

LV-1710

ONO SOKKI