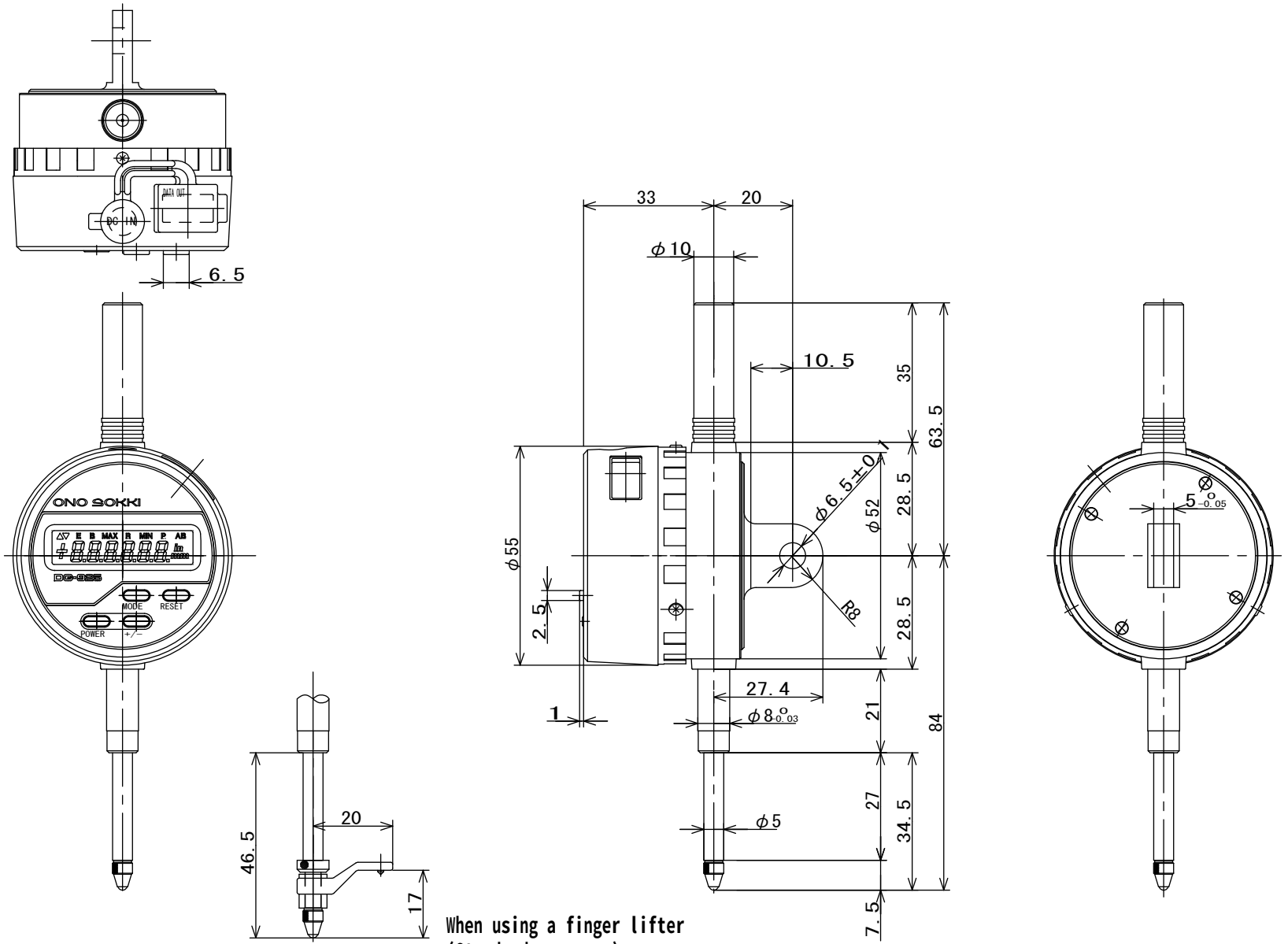

When using a finger lifter
(Standard accesory)

Weight: Approx.180g
(Unit:mm)

DG-925
ONO SOKKI