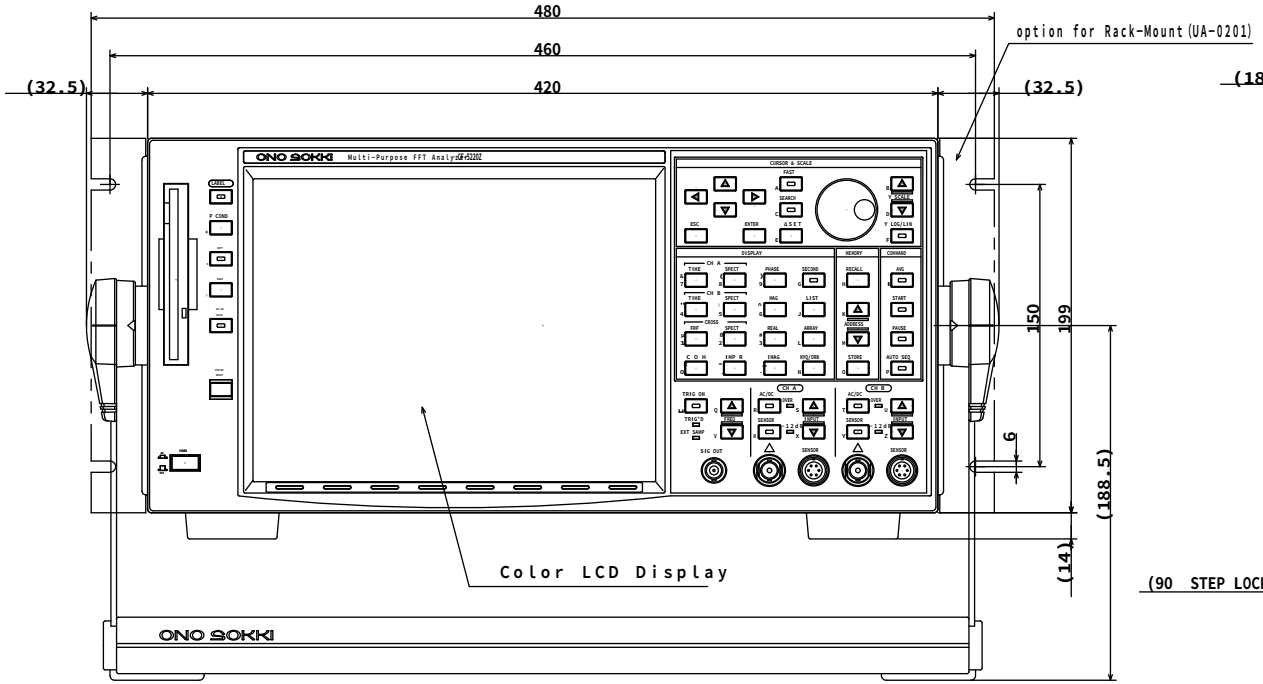

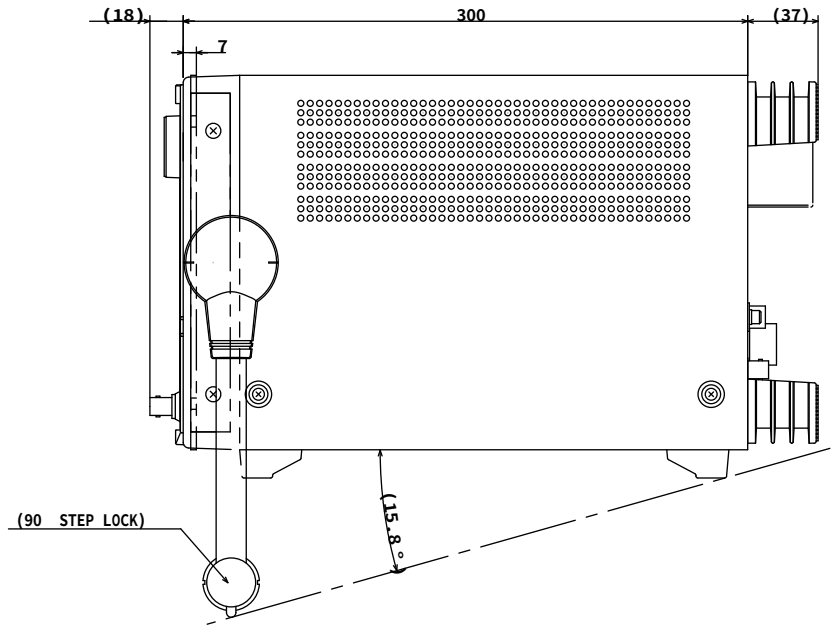

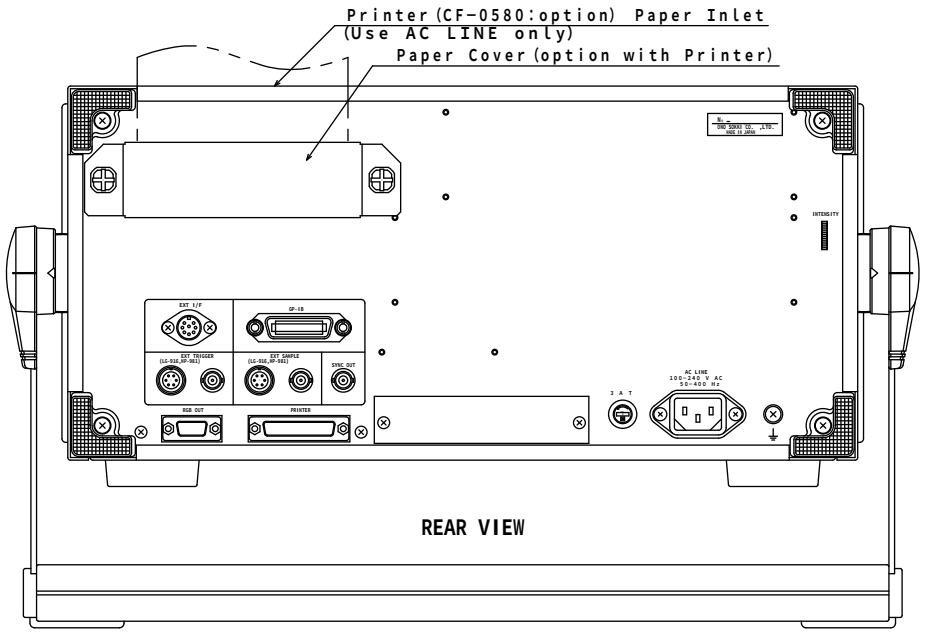

REAR VIEW

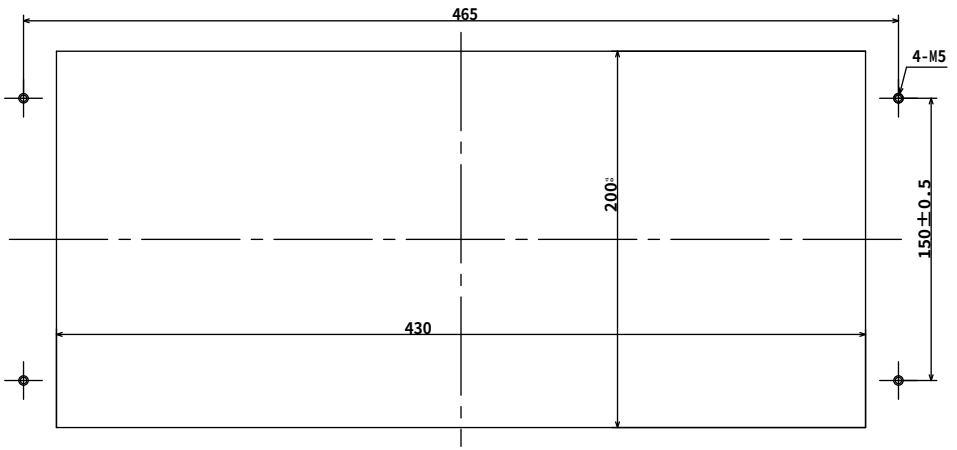

PANEL-CUT DIMENSIONS

CF-5220Z
ONO SOKKI

Weight: Approx. 11kg
(Unit: mm)