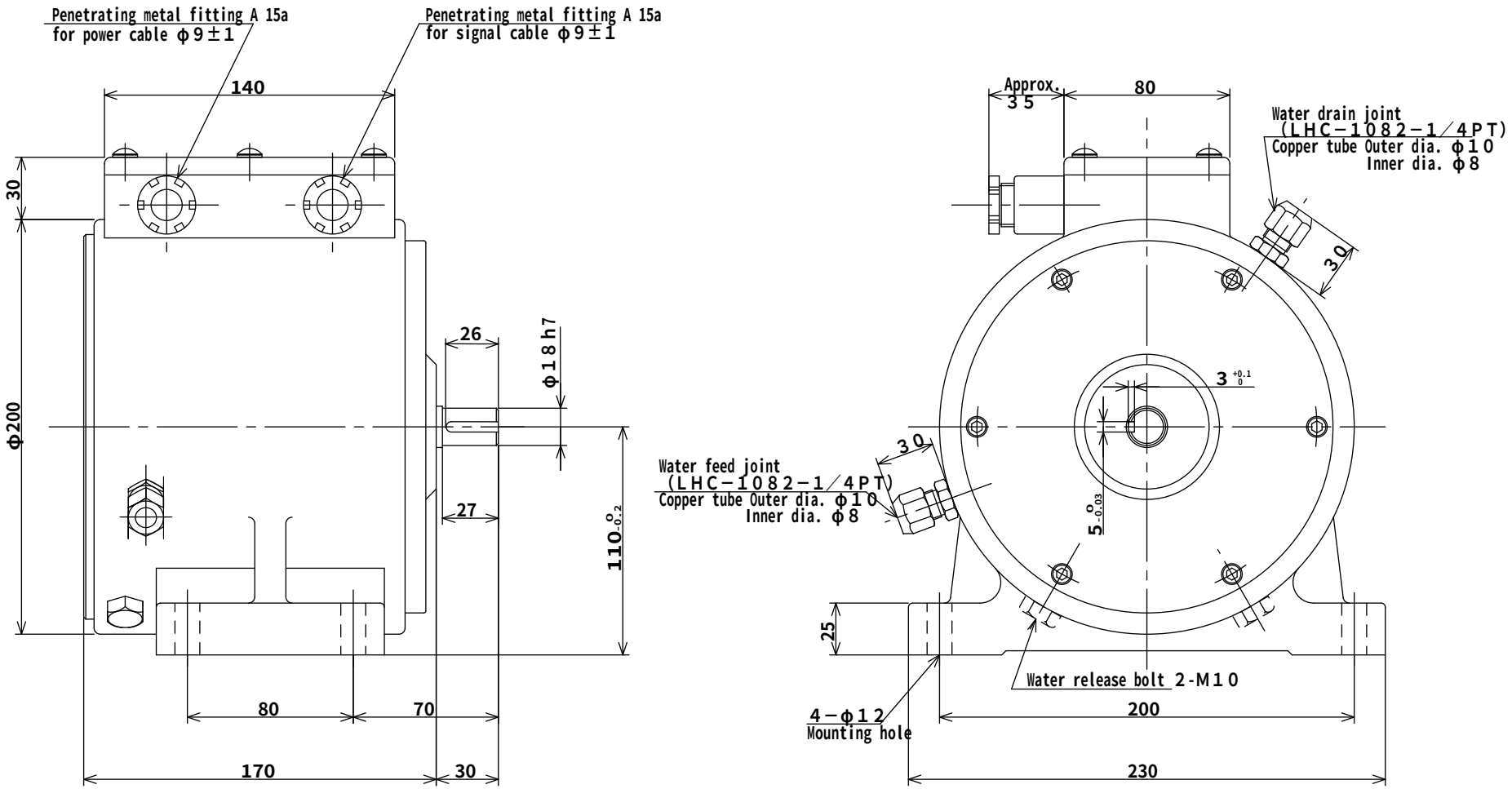

	Flow	Pressure
Cooling water	2 l/min	1 kg/cm²
Cooling air	200 l/min	1 kg/cm²

(Unit: mm)

RP-310/320 series

ONO SOKKI