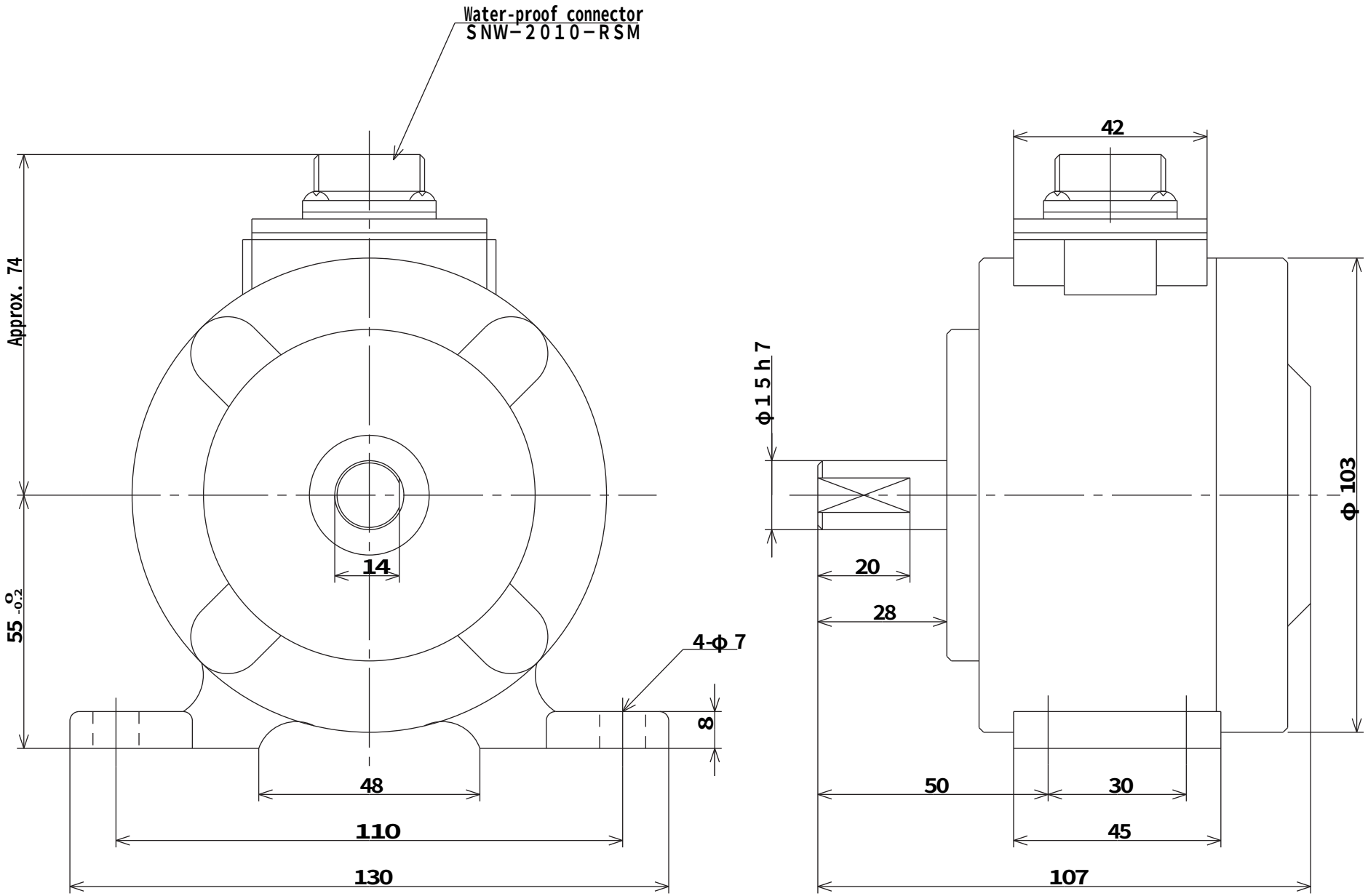

Coating color: Black alumite
Weight: Approx. 1.4kg
(Unit: mm)

RP-1130D series

ONO SOKKI